Iot and Deep Learning Based Approach for Rapid Screening and Face Mask Detection for Infection Spread Control

Mrs. Suvarna S. Patil
Asst. Professor(Dept. Of ECE), Rao Bahadur Y Mahabaleshwarappa Engineering College, Ballari, Karnataka, India.
Ms. Nidhi Patil
Student of 4th Sem, M.Tech(DCN, Dept Of ECE) in Rao Bahadur Y Mahabaleshwarappa Engineering college, Ballari, Karnataka, India.

Article Info
Page Number: 1334-1340
Publication Issue:
Vol. 71 No. 3s (2022)

Article History
Article Received: 22 April 2022
Revised: 10 May 2022
Accepted: 15 June 2022
Publication: 19 July 2022

ABSTRACT
We propose a low-cost enabled COVID-19 standard operating procedure (SOP) compliance system that counts the number of people entering and leaving vicinity, ensures physical distancing, detection of face mask managers of violations. The system comprises of multiple sensor nodes communicating with a centralized server. The data stored on the server can be used for compliance auditing, real-time monitoring, and planning purposes. The system does not record the personal information of attendees nor provide contact tracing information
In the current wake of the COVID-19 pandemic, preventing and/or limiting the community spread of the virus is a mammoth task, with governments and administrations across the world applying different strategies to restrict population movement and social interaction. A result has been serious socio-economic impacts.

INTRODUCTION

Kevin Ashton framed the term internet of Things in the year 1999. Main function of this IoT is to connect objects, machinery, and vehicles to the internet through Global System for Mobile communication, Radio Frequency Identification, WiFi. This main idea of connecting Bluetooth and other items are used to manage appliances and other things. IoT is machine to machine form of communication in which via some platform the things or devices are connected, then the acquired information is transferred the platform we utilised to link the devices to our system, laptop, or smartphone over the internet.

IoT works in four stage layer, which can described as below:

1. Network layer:Sensors or actuators are associated with interlinked stage to detect the outside climate and give the information to the transitional stage to make an expected move in this network layer.
2. Internet gateway: Information obtained from sensors is simple in nature which is changed over to advanced structure for additional handling and this is finished by information securing framework (DAS). DAS changes information from simple over completely to computerized.
3. Management Layer:An interface between application layer and internet gateway is known as management layer. The management layer controls a device information and information gathered by layer internet gateway. Layer collects an abundance of raw data from the environment and obtain its real-time data.

4. Application layer: The main layer that offers interfacing between a person and internet-connected devices is known as application layer. Transportation, healthcare, agriculture, supply chains, government, and retail are a few examples, many other fields it can be used.

In our project we are using IoT and deep learning method to design a system used for face mask detection and rapid screening during such covid-19 pandemic times.

LITERATURE SURVEY

[1]Bartik, A.W.; Bertrand, M.; Cullen, Z.; Glaeser, E.L.; Luca, M.; Stanton, C. The Effect of COVID-19 on private venture results and assumptions. Proc. Natl. Acad. Sci. doi:10.1073/pnas.2006991117. USA 2020, 117, 17656–17666.

Over 5,800 private enterprises were surveyed between March 28 and April 2 to learn more about the impact of the Covid disease 2019 (COVID-19) on independent ventures. Between March 28 and April 4, 2020, an evaluation of more than 5,800 private enterprises was conducted in order to examine the impact of COVID contamination 2019 (COVID-19) on them. A few issues came up. First and foremost, less than a month into the emergency, there had already been widespread layoffs and reductions in force.The probability of ending was also closely related to the average duration of the emergency. Additionally, organisations' views on the appropriate duration of COVID-related disturbances were usually shifting. Third, many private enterprises are financially precarious: At the time of the evaluation, the middle-sized business with monthly expenses of at least $10,000 had roughly a week's worth of available cash. In addition, the bulk of organisations expected to use the Coronavirus Aid, Relief, and Economic Security (CARES) Act to find funding.Neverthless, there were a lot of anticipated difficulties entering the programme, such as regulatory challenges and difficulties defining qualifying. As well obtain rates of adoption and business flexibility impacts for credits compared to award-based schemes using trial variety. plus April 4,2020. A few issues came up.First and foremost, only half a month into the emergency, there was already proactive mass redundancies and cutbacks in strength. Moreover, the chance of termination was tightly linked to the average length of the emergency. Organizations also held widely divergent opinions about how long COVID-related disturbances might probably persist.

[2]Z. Advancements and designs of the (IoT) Internet-of-Things for wellbeing, prosperity, Pang,(Ph.D). Proposal,Sweden, January 2013, KTH Royal Institute of Technology.

Work was on personage wellbeing and prosperity is a definitive objective of any financial, innovative and social turn of events. The quick evolving and expanding of populace ismajor full scale controls that will alter the world emphatically, it has made tremendous progress strain food foundations for medical supply and care worldwide, the arising creativity leap ahead of the IoT is supposed to provide assuring arrangements (NIC2008).Hence the usage of IoT advances for food production network (FSC) (alleged Food-IoT) and in-house medical care (IHH) (supposed Health-IoT1) have been normally featured in the essential exploration guides (European Commission Information Society 2009). Foster basically uses advances, models for these IoT 2 applications is last objective of their work.

[3] Guangcheng Wa, Zhongyuan Wang, ng, Zhangyang Xiong, Baojin Huang, Qi Hong, Hao Wu, "Concealed Face Recognition Dataset and Application", arXiv:2003.09093v2 [cs.CV] 23 Mar 2020.

Nearly everyone dons a veil during the Covid plague to effectively stop the transmission of the COVID19 illness. Due to this, standard face identification technology, like local area access management, facial involvement, and facial security checks during train stations, etc., is all but rendered insufficient. Therefore, it is extremely important to continue improving how present face identification technology recognises hidden faces. Recent high-level facial recognition techniques are developed in response to profound understanding and rely on numerous face tests. However, there aren't any publicly available datasets for covered face acknowledgment as of yet. In order to achieve this, the paper suggests three different types of covered face datasets, including the Simulated Masked Face Recognition Dataset, the Real-world Masked Face Recognition Dataset, and the Masked Face Detection Dataset (MFDD) (SMFRD). RMFRD is reportedly one of them and is now the largest real covered face dataset in existence. These statistics are publicly available to the academic and industrial communities, enabling the development of numerous applications relating to masked appearances. Our 95 percent accuracy multigranularity veiled face recognition model outperforms the results made public by the business.

[4] Kyle J. Card.,Andrew Dhawan., Dena Crozier., Mina Dinh., , "UV Sterilization of Personal Protective Equipment with Idle Laboratory Biosafety Cabinets During the COVID-19 Pandemic", research March 27, 2020.

Individual defensive hardware (PPE), including careful covers and N95 respirators, means quite a bit to the security of the two patients and clinical work force, especially in case of irresistible variety of pandemics. By the rate of Coronavirus (COVID-19) which is expanding dramatically in the US and around the world, medical services supplier interest for these necessities is right now dominating stock. In that capacity, techniques to securely extend the life expectancy of the stock of clinical gear are fundamentally significant. In the new days, weeks, and months, amidst the ongoing pandemic, there has been a coordinated work to distinguish practical ways of saving Personal Protective Equipment, including cleansing after use. A few medical clinics have previously started utilizing UV-C light to disinfect N95 respirators, however numerous miss mark on space or hardware which execute ongoing conventions. By this review, they frame methodology in which N95 respirators might be cleaned utilizing bright (UV) radiation in biosafety cupboards (BSCs), which is a typical component of numerous scholar, general wellbeing, and clinic research facilities.The essential obstruction this strategy is the chance radiation levels in UV shift inside BSCs. To represent this likely variety in dosage across foundation of BSC, we tried the UV-C radiation in 2 haphazardly picked inactive BSC's in our examination organization and noticed a most extreme proportion between the base and greatest recorded powers inside a given BSC to be 1.98. In light of these qualities, we determined that a N95 veil set inside a BSC with a maker's accounted for fluence of 100 μWcm^{-2} ought to be successfully disinfected for reuse after roughly 15-20 minutes for each side. Our outcomes offer help to medical care associations searching for elective techniques to expand their stores of PPE. It is our expectation that with an effortlessly carried out technique, as we have introduced here, inactive BSCs can be used to

ease the PPE deficiency by giving a method for cleaning PPE to permit safe day to day re-use. This ought to be tried for a bigger scope, and affirmed in a virology lab before reception, however we battle that in extremis, this technique would be favoured contrasted with re-use without disinfection.

EXISTING METHOD

In the existing system there are some of the technologies are used to maintain social distancing and manual temperature monitoring. Since this technology is not much effective, when more people come to a common place. Temperature monitoring also becomes difficult if many people arrive.

Drawbacks:

- This technology is not much effective, when more people come to a common place.
- Temperature monitoring also becomes difficult if many people arrive.

PROPOSED SYSTEM

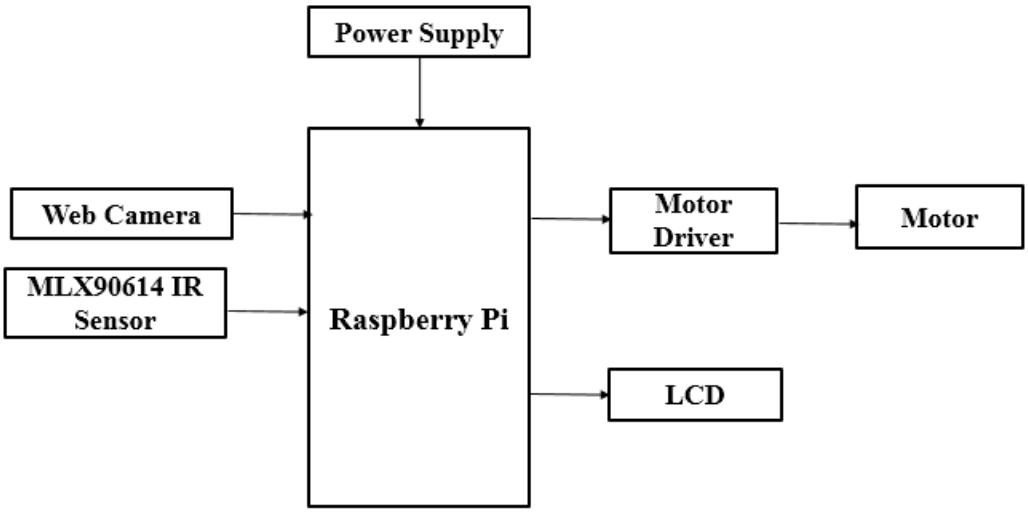

In this project we make use of Raspberry Pi, Web camera and Temperature Sensor. Firstly, when a person comes, it checks for mask. If mask detected only then proceed to next stage. If mask not detected, the camera screen will display “Please wear Mask”. If mask detected, it displays “Thank you for wearing mask”, and proceed to next stage. Next it checks for Temperature that is thermal screening if the temperature is normal then it will display temperature is normal. If all the above stages completed, finally the door opens using dc motor.

REQUIREMENT SPECIFICATIONS

HARDWARE REQUIREMENTS

1. Raspberry Pi.
2. Webcam.
3. MLX9061 IR Temperature Sensor.
4. Motor driver.
5. DC motor.
6. Connecting wires.

SOFTWARE REQUIREMENTS

1. NOOBS OS
2. Advanced IP Scanner
3. VNC Viewer
4. Python IDLE

RESULTS

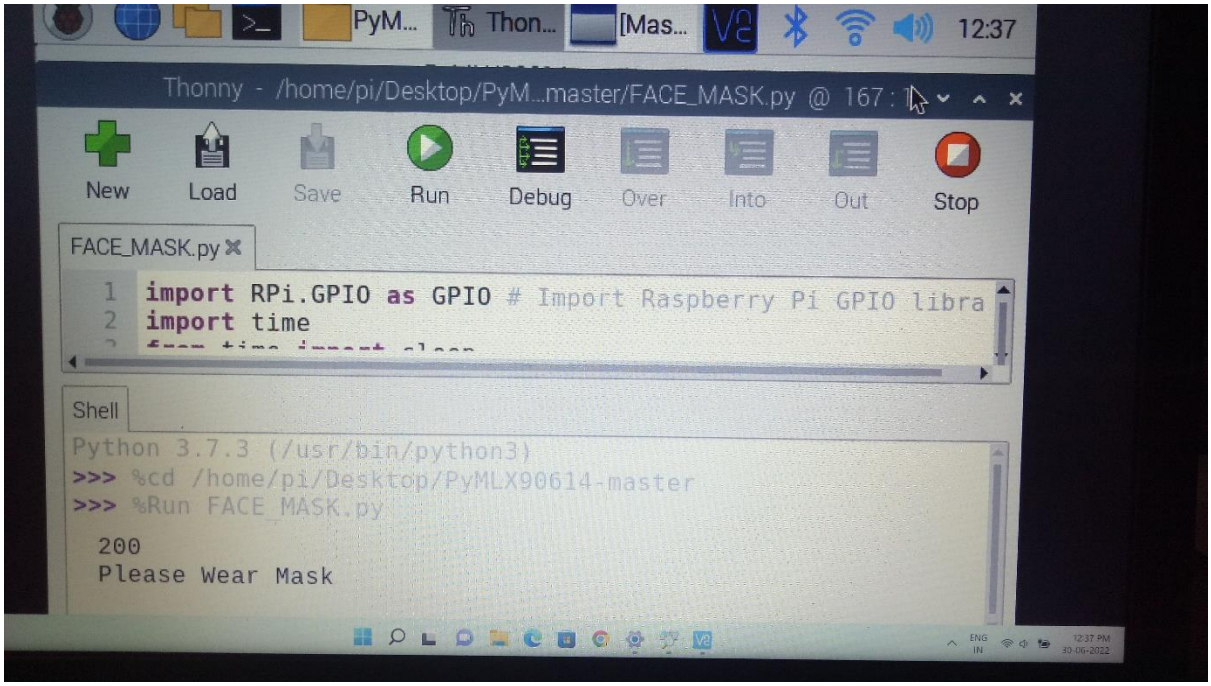

Fig: Result Depicting No Mask

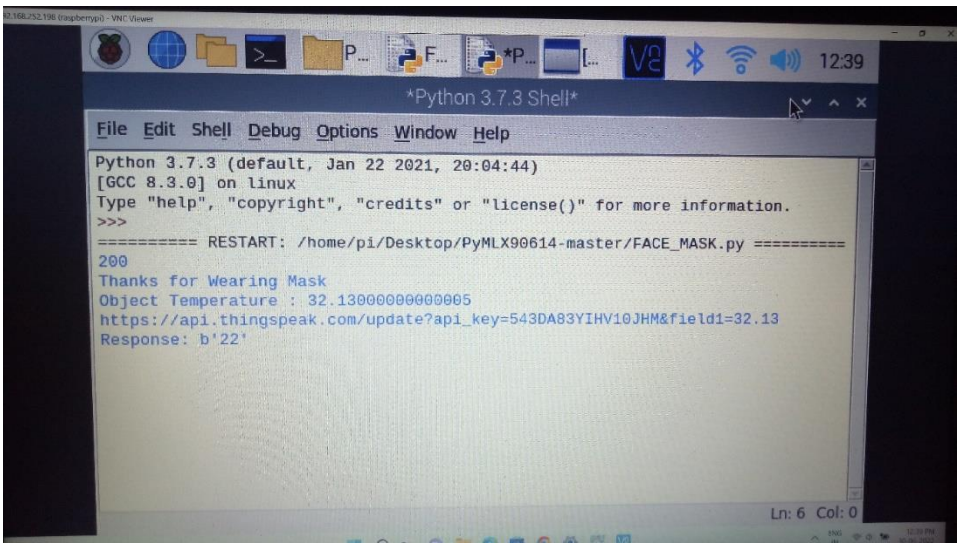

Fig : Result Depicting Wearing Mask, Temperature

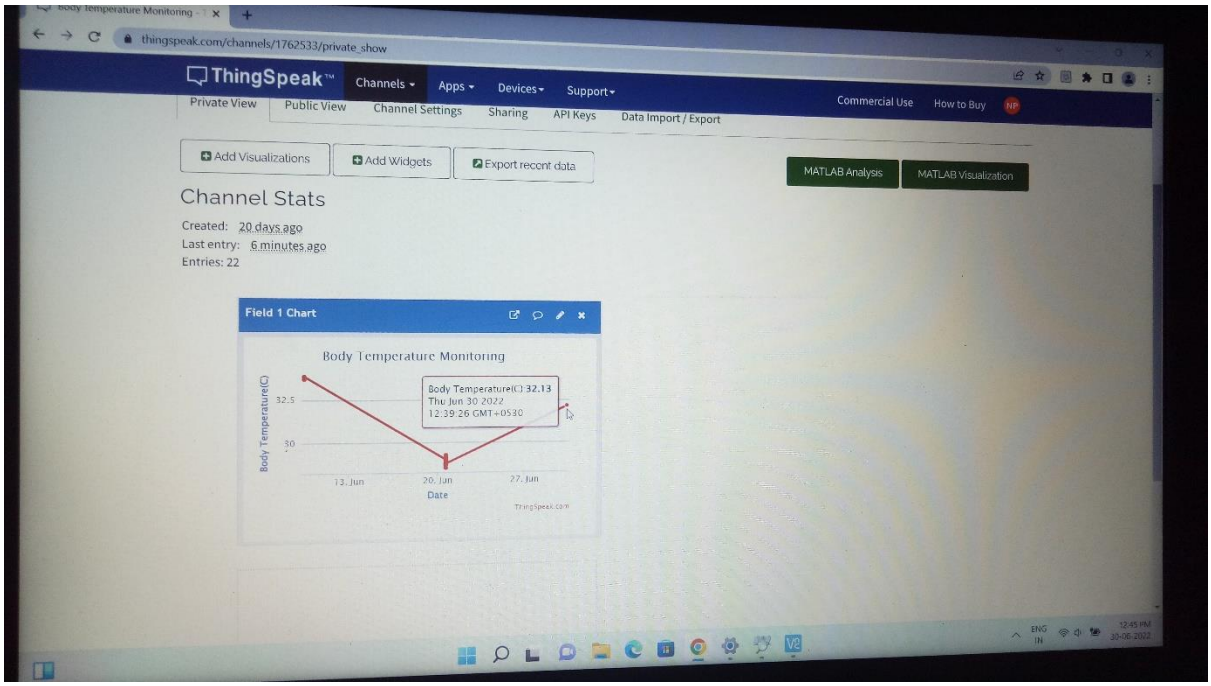

Fig : Think Speak Chart Of Measured Body Temperature

1. We designed a complete hardware of infection spread control system using IoT and Deep learning.
2. In this every component is attached to Raspberry-Pi 4 Model to get output which is find if people are wearing mask or nor and measure their body temperature.
3. Since infection spread is the main concern going on these days due to the pandemic situation our project helps in meeting the requirements of rapid screening and infection spread control.
4. The system is friendly enough to be updated according to the requirements of the user.

ADVANTAGES

1. This is safest method while going in public, in this covid-19 situation.
2. Low cost and high effective system.
3. Compact system.
4. Accurate .

APPLICATIONS

1. Homes.
2. Offices.
3. Schools.
4. Colleges.
5. Shopping Malls.

CONCLUSION AND FUTURE SCOPE

A powerful answer for guarantee COVID-19 security consistence is primary goal of our work. Our project depends on open source programming, furthermore broadly accessible sensors to produce a minimal expense and simple to design tweak project. It requires valuable genuine

investment data remotely to dashboard which can be utilized to screen and aid COVID-19 SOP. Framework is presently restricted to passage level filtering. The framework can be broadened effectively with negligible time and is rapidly versatile to various circumstances since it utilizes IoT.

This work will continue to expand identification for entire floor region, contact tracking, and backing for further lines. Because it uses IoT and can be used continuously, the framework can be successfully expanded in a short amount of time and is easily adaptable to many circumstances.

Reference

1. V. N. Patil and D. R. Ingle, "A Novel Approach for ABO Blood Group Prediction using Fingerprint through Optimized Convolutional Neural Network", Int J Intell Syst Appl Eng, vol. 10, no. 1, pp. 60–68, Mar. 2022.
2. P. M. Paithane and D. Kakarwal, "Automatic Pancreas Segmentation using A Novel Modified Semantic Deep Learning Bottom-Up Approach", Int J Intell Syst Appl Eng, vol. 10, no. 1, pp. 98–104, Mar. 2022.
3. Agarwal, D. A. . (2022). Advancing Privacy and Security of Internet of Things to Find Integrated Solutions. International Journal on Future Revolution in Computer Science &Amp; Communication Engineering, 8(2), 05–08. https://doi.org/10.17762/ijfrcsce.v8i2.2067
4. Garg, D. K. . (2022). Understanding the Purpose of Object Detection, Models to Detect Objects, Application Use and Benefits. International Journal on Future Revolution in Computer Science &Amp; Communication Engineering, 8(2), 01–04. https://doi.org/10.17762/ijfrcsce.v8i2.2066
5. Tume-Bruce, B. A. A. ., A. . Delgado, and E. L. . Huamaní. "Implementation of a Web System for the Improvement in Sales and in the Application of Digital Marketing in the Company Selcom". International Journal on Recent and Innovation Trends in Computing and Communication, vol. 10, no. 5, May 2022, pp. 48-59, doi:10.17762/ijritcc.v10i5.5553.
6. Arellano-Zubiate, J. ., J. . Izquierdo-Calongos, A. . Delgado, and E. L. . Huamaní. "Vehicle Anti-Theft Back-Up System Using RFID Implant Technology". International Journal on Recent and Innovation Trends in Computing and Communication, vol. 10, no. 5, May 2022, pp. 36-40, doi:10.17762/ijritcc.v10i5.5551.
7. Pawan Kumar Tiwari, Mukesh Kumar Yadav, R. K. G. A. . (2022). Design Simulation and Review of Solar PV Power Forecasting Using Computing Techniques. International Journal on Recent Technologies in Mechanical and Electrical Engineering, 9(5), 18–27. https://doi.org/10.17762/ijrmee.v9i5.370
8. Deepak Mathur, N. K. V. . (2022). Analysis & Prediction of Road Accident Data for NH-19/44. International Journal on Recent Technologies in Mechanical and Electrical Engineering, 9(2), 13–33. https://doi.org/10.17762/ijrmee.v9i2.366
9. Ananthakrishnan, B., V. . Padmaja, S. . Nayagi, and V. . M. "Deep Neural Network Based Anomaly Detection for Real Time Video Surveillance". International Journal on Recent and Innovation Trends in Computing and Communication, vol. 10, no. 4, Apr. 2022, pp. 54-64, doi:10.17762/ijritcc.v10i4.5534.