Integrated Multi-Verse Evolutionary Programming and Evolutionary Programming Based Techniques for Optimal Placement of D-STATCOM Installation

Ahmad Faiz Idrus[1], **Ismail Musirin[1,2], Nor Azwan Mohamed Kamari[3], Siti Rafidah Abdul Rahim[4], A. V. Senthil Kumar[5], Mohd Helmi Mansor[6], Muhammad Murtadha Othman[1], Muhamad Hatta Hussain[4]

[1] School of Electrical Engineering, College of Engineering, Universiti Teknologi MARA, 40450 Shah Alam, Selangor, Malaysia. [1] School of Electrical Engineering, College of Engineering, Universiti Teknologi MARA, 40450 Shah Alam, Selangor, Malaysia.

[2] Power System Operation Computational Intelligence Research Group (POSC), School of Electrical Engineering, College of Engineering, Universiti Teknologi MARA,40450 Shah Alam, Selangor, Malaysia.

[3]Department of Electrical, Electronic and Systems Engineering, Faculty of Engineering and Built Environment, Universiti Kebangsaan Malaysia, 43600 Bangi, Selangor, Malaysia.

[4]Faculty of Electrical Engineering Technology, Universiti Malaysia Perlis, Kampus Pauh Putra, 02600, Arau, Perlis, Malaysia.

[5]Hindusthan College of Arts and Science, Coimbatore, India.

[6]Department of Electrical and Electronics Engineering, College of Engineering, Universiti Tenaga Nasional, Kajang, Selangor, Malaysia

e-mail: **ismailbm@uitm.edu.my

Article Info
Page Number: 986 - 1001
Publication Issue:
Vol 71 No. 3s2 (2022)

Abstract

Progressing load demand has been identified as one of the factors that can cause an increase of transmission loss. Thus, compensation scheme is an important remedial action to ensure smooth delivery of electricity to the consumers. Among the popular remedial action is the installation of Distributed Flexible Alternating Current (D-FACTS) which can reduce the losses in transmission systems. In this paper, Distribution Static Compensator (D-STATCOM) is chosen as the compensation device, aims to reduce the total losses by injecting reactive power into the network. An integrated optimization technique is proposed to perform loss minimization in a reliability test system model. This proposed technique integrates the operator in multi-verse optimization technique (MVO) into the traditional Evolution Programming (EP), termed Integrated Multi-Verse Evolutionary Programming (IMVEP). The proposed IMVEP was then implemented to solve transmission loss control, where the sizing process of D-STATCOM was solved using IMVEP. Validation was conducted on the IEEE 30-Bus Reliability Test System (RTS). A comparative study was conducted with respect to the traditional EP, resulting in convincing results.

Article History
Article Received: *28 April 2022*
Revised: *15 May 2022*
Accepted: *20 June 2022*
Publication: *21 July 2022*

Keywords: - D-STATCOM, Computational Intelligence, Evolutionary Programming, Loss Minimization, Optimization.

Introduction

In this modern era, the transmission system is the important energy carrier in the power system so that the consumers can go on with daily life activities. In an electrical power system, there are three main sections which are the generation system that produce electricity, while the transmission system transports energy from the generation system and the distribution system supply the electricity to the loads for example home and industrial buildings. Unfortunately, several incidents can happen during the process, for example, the increase of power quality, events unstable voltage phenomenon, and the power losses. Many engineers come with new ideas to overcome these problems. One of the methods that can solve this problem is Distributed Flexible Alternating Current Transmission System (D-FACTS) installation. D-FACTS units directly connects the transmission lines and the function of the device is to control effective line impedance dynamically. Distribution Static Compensator (D-STATCOM) is one of the D-FACTS devices. By injecting or absorbing the reactive power, D-STATCOM can keep the reactive current stable at low voltage and have excellent operating features[1].

Research work is being carried out by many researchers for finding the optimal location and sizes of D-FACTS devices. There are a lot of mitigation techniques to overcome the problem in the transmission system by using D-STATCOM. All these methods can be classified into four categories which are metaheuristics techniques, analytical techniques, sensitivity approaches techniques, and artificial neural network-based techniques.

The metaheuristics technique is quite often used by many researchers for the mitigation techniques in the transmission system by using D-STATCOM. Those were dynamical, population-based optimization algorithms that are typically effective in the handling of multimodal, multi-objective, confidential, and constrained environments. Taher and Afsari [2] proposed a DSTATCOM immune algorithm for suitable location and size for reducing energy loss, expense, power instability, and optimize voltage profile. On the other hand, Devi and Geethanjali [3] have calculated the placement of D-STATCOM using particle swarm optimization algorithm. Analytical techniques consisting of simple algorithms used in the deprivation of efficient computational resources. The objective of applying research techniques for the optimal allocation of D-STATCOM is the same as other techniques which aim to find the best alternatives before considering the non-linearity and complexity of the problem. Any approximations to these algorithms should also be applied to minimize the computational phase. Hosseini and Shayanfar [4] have developed mathematical modelling and have chosen the perfect position for both D-STATCOM and SSVR in the sense of voltage mitigation problems in the distribution network. The model D-STATCOM is developed from the load flow software. In this model, the rating and direction of the reactive power injection referred to as D-STATCOM [7-24] for voltage compensation at the desired value (1.00 p.u.) are derived. Nowadays, the Artificial neural network (ANN) technique makes many researchers interesting in it. The artificial Neural Network (ANNs) technique is the combination of mathematical models that are strongly driven by the structural features of biological neural networks. The advantage of using this technique is that ANNs have a great ability to learn and interpret data features. There are 7 types of Artificial Neural Networks (ANN) such as modular neural networks, feedforward neural networks, radial basis function neural networks, Kohonen self-organizing neural networks, Recurrent Neural Network (RNN), convolutional neural networks, and long/short term memory. Few researchers use the Artificial Neural Network (ANN) technique for the installation of D-STATCOM for example

in [5], the author used the ANNs based technique to find a suitable place for D-STATCOM and DVR in the distribution system. In detail, the method used in [5] is a feedforward neural network. Unfortunately, the authors did not provide comparative studies with other techniques. Other important optimization technique is the ant colony optimization (ACO), which has broad application [25]. Other possible application of ACO is the use of ACO in pipeline network system, which involved modelling and optimization. This is also possible to be utilized for D-STATCOM installation problem.

This paper presents a computational intelligence-based technique for optimal placement of D-STATCOM [6-24] in transmission loss control in a power system. In this study, a new optimization technique termed as Integrated Multi-Verse Evolutionary Programming (IMVEP) is proposed. The proposed IMVEP was then implemented to solve transmission control, where the sizing process of D-STATCOM was solved using IMVEP. Validation was conducted on a reliability test system (RTS), namely the IEEE-30-Bus RTS. Comparative study was also conducted with respect to the traditional Evolutional Programming. Furthermore, in the later section, the alternative solution followed by the findings will be addressed and the inference in the last section. IMVEP was proposed to solve the current weakness in Evolutionary Programming (EP). So, the element in Multiverse Optimization (MVO) can achieve a better solution in terms of convergence capability.

Methodology

A. D-STATCOM Modelling

Figure 1 illustrates the modelling of the D-STATCOM. It can be modeled as the source inverter, energy storage, and transformer. In general, D-STATCOM can be modeled either to inject reactive power, inject active power, or both. Thus, a designer has the option to do any necessary scheme. In general, the following strategies have been identified as the important factors in the placement of D-STATCOM:

- Reduction of power loss
- Improved voltage profile
- Improved performance
- Reduction of costs
- Increase the performance of load balance
- Reduction of Total Harmonic Distortion (THD)

In addition, the following variables have been chosen to minimize the issue of equality or inequality constraints:

- Limitation of voltage deviation
- Balance of power
- Limitation of current
- Compensation of reactive power
- Limitation incapacity of D-STATCOM
- Limitation of costs

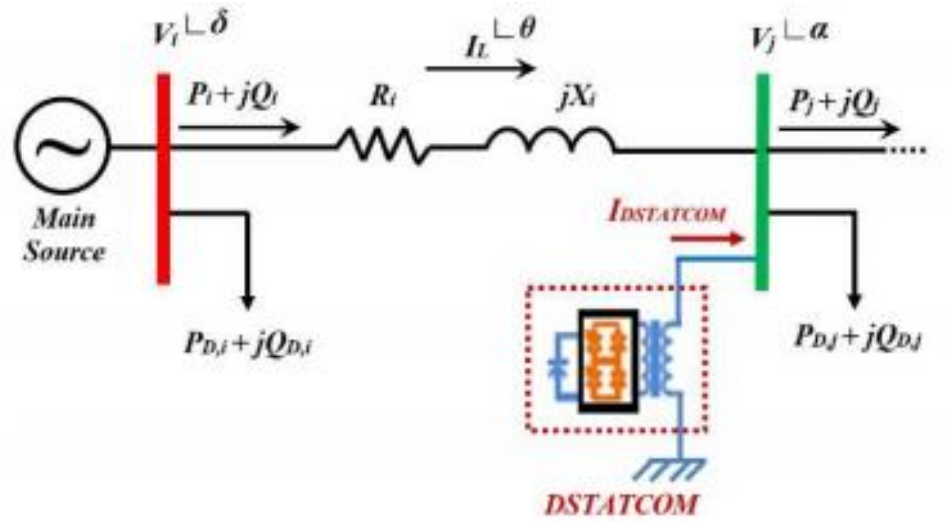

Figure 1: Single line diagram of D-STATCOM

The following equation can be written for the simple transmission lines.

$$V_j\angle\alpha = V_i\angle\delta - Z_{ij} * I_L\angle\theta \quad (1)$$

The equations change to the following form after installing the D-STATCOM at bus j, as seen in the Figure 2

$$V_j\angle\alpha = V_i\angle\delta - Z_L(I_L\angle\theta + I_{DSTATCOM}\angle\theta + {}^{\pi}/_{2} \quad (2)$$

As an outcome, the injected reactive power can be calculated using the formula:

$$Q_{DSTATCOM} = V_{j.new} * I_{DSTATCOM} \quad (3)$$

The correlation between D-STATCOM's current and reactive power injection:

$$I_{DSTATCOM} = \frac{Q_{DSTATCOM}}{V_{j.new}} \quad (4)$$

It should be noted that DSTATCOM current and reactive power injection change with voltage at the injection site before reaching its optimum reactive rating.

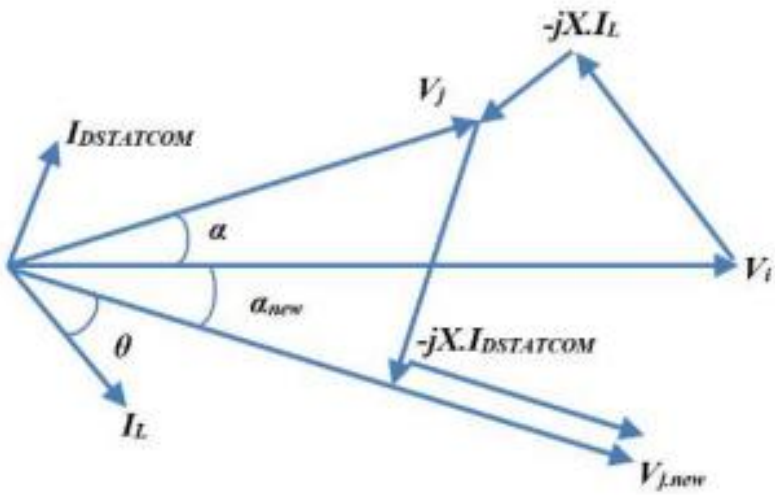

Figure 2: Phasor diagram after installation of D-STATCOM

There are two main parts in the D-STATCOM [18-24] with specific functions:

a) Voltage source converter – to convert an alternating current input voltage to a three-phase output voltage at the fundamental frequency. These voltages are in sync and are coupled with the alternating current system via the coupling transformer's reactance. The effective coordination of active and reactive power exchange between the DSTATCOM and the ac system is enabled by appropriate modification of the phase and magnitude of the D-STATCOM output voltages.

b) Controller – to control the generator so that the amplitude of the reactive current is guided by reference current.

It also consists of a DC storage device and coupling transformer connected in shunt to the distribution networks.

B. Optimization Techniques

I. Proposed Integrated Multiverse Evolutionary Programming (IMVEP)

The Integrated MVO-EP algorithm or simply termed as IMVEP, is a nature-inspired algorithm that resembles a present multi-versus theory that many researchers are familiar with [6], [8-15]. It was assumed that there would be many big bangs, which would aid in the formation of a new universe. According to the multi-versa theory, such new multi-universes will collide and interact with one another. The evaluation procedure is separated into two stages: exploitation and exploration. The white hole, black hole, and wormhole are MVO's three main theories.

A white hole is a big bang that does not exist in the cosmos and is thought to be the primary source of the universe. The universe detects the black hole that will draw the universe's objects in. The wormhole, on the other hand, is a passageway between two universes that serves as a time/space travel tunnel via which items can transit from one reality to another to any area of the universe. Each universe has an inflation rate that contributes to its expansion. The inflation rates are used to calculate the fitness value. The Wormhole Existence Probability (WEP) and Travelling Distance Rate (TDR) formulae [7] are used to modify the universe's location.

$$WEP = min + t * \left(\frac{max - min}{Tmax}\right) \quad (5)$$

Where max and min are constants (min = 0.2, max = 1), and P = 0.6 represents the exploitation accuracy constant. It is worth noting that the best universe has more WEP values and fewer TDR values [7].

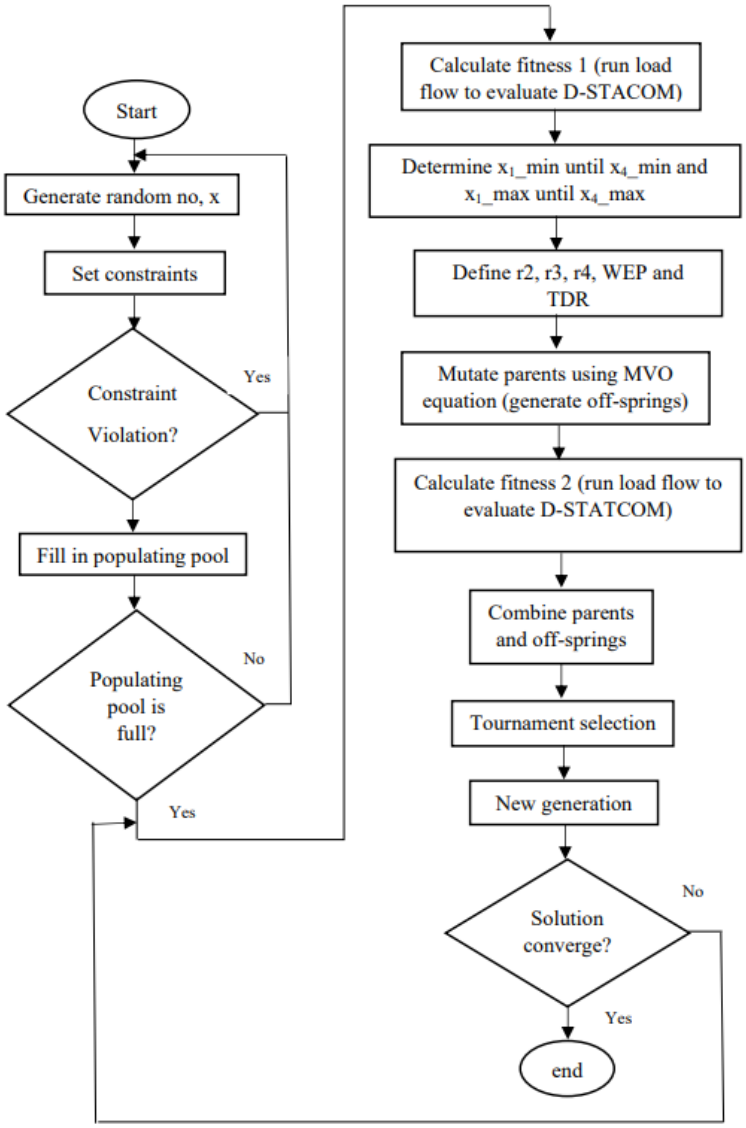

Figure 3: Flowchart of IMVEP

The values of WEP and TDR are already stated in [7] where the value of WEP is 0.8 while the value of TDR is 0.0005 and the value of each r_2 is multiplied by 0.8. These values are used in the programming. The main equation of this MVO algorithm is stated as:

$$x_i^j = \begin{cases} \begin{cases} x_j + TDR.\left[\left(ub_j - lb_j\right).r_4 + lb_j\right] & r_3 < 0.5 \\ x_j - TDR.\left[\left(ub_j - lb_j\right).r_4 + lb_j\right] & r_3 \geq 0.5 \end{cases} & r_2 < \text{WEP} \\ x_i^j & r_2 \geq \text{WEP} \end{cases} \quad (6)$$

The flowchart of IMVEP is illustrated in Figure 3. IMVEP goes through several process such as initialization, fitness, mutation, selection and convergence test. For the mutation process equations (5) and (6) will take part. For IMVEP technique, only sizing and losses are considered. Figure 3 exhibit the flowchart of IMVEP dedicated in determining the optimal sizing of D-STATCOM. The locations of D-STATCOM are set at bus 14 and 26. If the value of losses and sizing are not converged, the loop are repeated until all the values of sizing and losses are converged.

II. Evolutionary Programming (EP)

As mentioned in the previous section, EP involved initialization, fitness calculation, statistics, mutation, and selection. Detailed explanations of each procedure are described in the subsequent sections. The overall EP process is represented in the form of a flow chart as illustrated in Figure 4.

i. Random Number Generation

The initialization process in EP was conducted by generating a series of random numbers using a uniform distribution number generator. To estimate the minimum losses, the random number represents the reactive power loading at a particular load bus. The number of variables depends on the number of particular load buses. Since the objective of adopting EP is to achieve the minimum losses using accelerated search technique, therefore the parameter would be only the reactive power on one load bus. Some constraints must be set at the beginning so that the EP would only generate random numbers that satisfy some pre-determined constraints. For minimum losses identification, four constraints were identified i.e., two for location and the other two are for sizing. The losses value calculated using the generated random numbers must be smaller than loss_set value to indicate that the fitness value is reduced as the objective function is the minimization of total transmission loss.

ii. Fitness Calculation and Statistical Evaluation

In this study, loss value is taken as the fitness function, which needs to be minimized and it was calculated by solving the ac load flow program. It was done by calling the load flow program into the EP main program. Thus, in this problem, the objective function was not going to be a single mathematical equation but rather a subroutine that is executed accordingly in the EP main program. Subsequently, evaluation of maximum, minimum, sum, and average of fitness would be carried out which would be utilized in the mutation process.

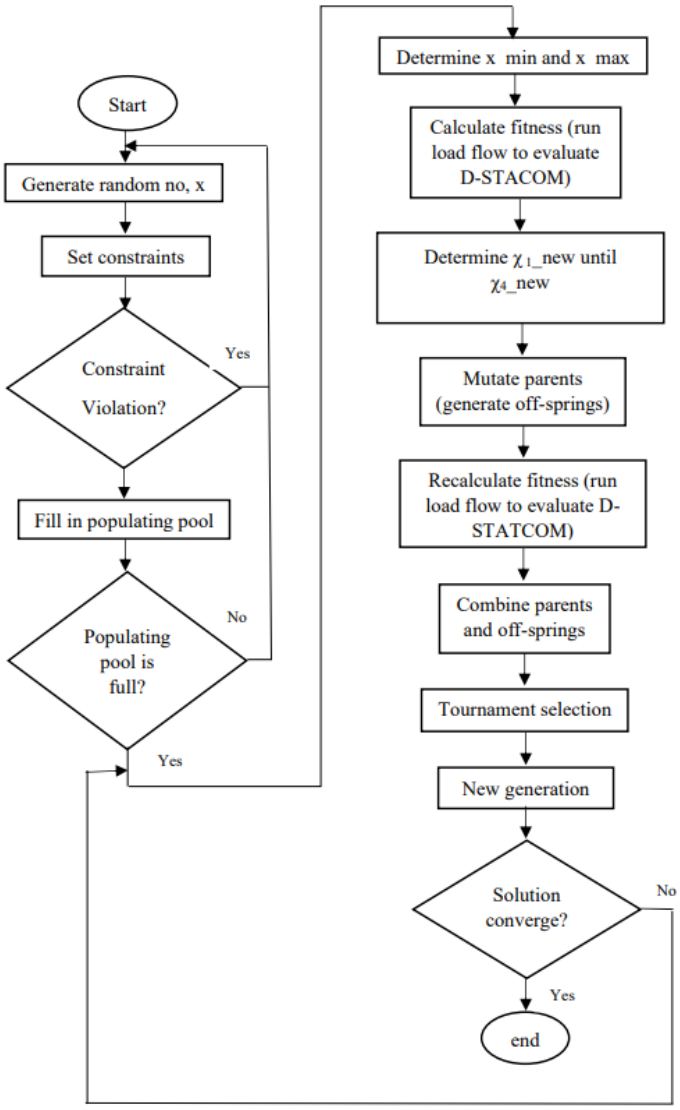

Figure 4: Flowchart of Evolutionary Programming

iii. Mutation

The mutation was performed on the generated random numbers, x_i to produce the offspring. The mutation process was implemented based on the following equation:

$$x_{i+m,j} = x_{i,j} + N(0,\gamma^2) \quad (7)$$

$$\gamma^2 = \beta(x_{j,max} - x_{j,min})\frac{f_i}{f_{max}} \quad (8)$$

where:

$x_{i+m,j}$ = mutated parents (offspring)

x_{ij} = parents

N = Gaussian random variable with mean m and variance g^2

b = mutation scale, 0<b <1

$x_{j\,max}$ = maximum random number for every variable

$x_{j\,min}$ = minimum random number for every variable
f_i = fitness for the ith random number
f_{max} = maximum fitness

The mutation scale b could be manually adjusted to achieve better convergence. A large value of b implies a large search step, which causes slow convergence of the EP leading to large computational time and vice versa. The b value was determined by using the heuristic technique that could produce the best result.

iv. Selection

The offspring produced from the mutation process was subsequently combined with the parents to undergo a selection process to identify the candidates to be transcribed into the next generation. Two selection strategies were tested namely the priority selection and pair-wise comparison. In the priority selection strategy, the populations were sorted in descending order according to their fitness values since the objective function is to obtain the minimum losses.

On the other hand, in the pair-wise comparison strategy; ten opponents were randomly generated for every combined population. Opponents underwent a tournament process with the combined populations via pair-wise comparison and the number of wins was calculated for every element in the combined population. These populations were sorted in descending order according to the number of wins. The first half population was then transcribed for the next generation. Comparing the two selection strategies; the priority selection provides a better result and therefore it is employed in the selection process of the developed EP.

v. Convergence Test

The convergence test is important to determine the stopping criterion of the evolution. The pre-determined accuracy is normally dependent on the problem orientation. The convergence criterion is duly specified by the difference between the maximum and minimum fitness $\leq$ 0.0001. If it is not reached, the process will be repeated.

$$\text{maximum}_{\text{fitness}} - \text{minimum}_{\text{fitness}} \leq 0.0001 \quad (9)$$

Result and Discussion

This segment consists of the findings of the intended method which are Evolutionary Programming (EP) and Integrated Multi-verse-Evolutionary Program (IMVP) that has been validated on the IEEE-30-Bus RTS. It started with the simulation using EP followed by IMVEP. The analysis has been carried out in MATLAB version 9.4 on Windows 10 Intel® Core™ i5 Processor, 1.6 GHz, RAM 12 GB. The results are explained in this section.

A. Evolutionary Programming (EP)

B. In Evolutionary Programming (EP), there are 2 D-STACOMs used. Four variables have been used in EP. The first two variables x_1 and x_2 are used to represent the D-STATCOM locations, while x_3 and x_4 are used to represent the sizing of D-STATCOMs. These variables

are the perimeters that controlled the optimization process for the purpose of minimizing the transmission loss in the system. Two cases have been considered in this study. Case 1 represents the load variation at bus 20 indicated by the variation of Q_{d20}, while case 2 is the condition for reactive variation at bus 18, Q_{d18}. For both cases, the value of the load bus varies from 10 Mvar to 100 Mvar. The initialization process produces a random number known as the value without the placement of D-STATCOM. Then, the fitness and other processes occur for the placement and sizing of D-STATCOM. Table 1 and Table 2 tabulate the results of losses in the system with the installation of D-STATCOM when load at buses 18 and 20 were gradually increased.

From Table 1, EP managed to reduce the transmission loss for Case 1 when the load bus at Q_{d20} is increased from 10 MVAR to 100 MVAR in stages. In general, at all loading condition shows loss reduction with the D-STATCOM installation. χ_1 and χ_2 represent the locations for the D-STATCOM, while χ_3 and χ_4 are the sizing of D-STATCOMs to be installed in the system for loss minimization. The reduction of loss value is very significant especially at the highest loading condition, i.e. Q_{d20}=100 MVar. In Table 1; when Q_{d20} is subjected to reactive load variation of 100 MVar, the loss has been reduced from 42.6276 MW to 24.6690 MW. This will require 54.9792 MVar at Bus 22 and 71.8517 MVar at bus 18 to be installed in the system.

Table 1: Results for Case 1 when the load bus at Bus 20, Q_{d20} optimized using EP

Q_{d20} (MVar)	χ_1	χ_2	χ_3 (MVar)	χ_4 (MVar)	Losses (MW) without D-STACOM	Losses (MW) with D-STATCOM
10	20	20	15.1479	7.7617	17.868	17.5791
20	17	19	13.6606	32.0374	18.2559	17.7315
30	16	20	26.6522	52.3658	18.8699	17.9497
40	20	25	62.0336	1.8693	19.7678	17.7037
50	20	25	62.0338	1.8695	21.0114	17.5517
60	20	25	62.0338	1.8695	22.7897	17.5449
70	22	19	7.0119	49.0285	22.2517	20.5658
80	22	18	54.9773	71.8461	28.9632	22.1776
90	22	18	54.9754	71.8469	33.7182	23.2413
100	22	18	54.9792	71.8517	42.6276	24.6690

Table 2: Results for Case 2 when the load bus at Bus 18, Q_{d18} optimized using EP

Q_{d18} (MVar)	χ_1	χ_2	χ_3 (MVar)	χ_4 (MVar)	Losses (MW) without D-STACOM	Losses (MW) with D-STATCOM
10	15	21	0.0013	21.0623	17.8077	17.5855
20	19	15	25.2513	2.0158	18.3394	17.5501
30	17	18	29.1062	27.2124	19.0866	17.6857
40	18	28	39.2356	32.5916	20.1876	17.7062
50	18	21	74.6707	10.0074	21.7383	17.7988
60	20	18	15.6453	73.9423	24.0881	17.8167
70	22	18	54.9756	71.8476	27.2378	18.1235
80	22	18	54.9760	71.8477	31.5921	18.2326
90	22	18	54.9814	71.8530	38.7711	18.5429
100	26	18	9.47880	147.2030	72.3095	18.9050

In Table 2; when Q_{d18} is subjected to reactive load variation of 100 MVar, the loss has been reduced from 72.3095 MW to 18.9050 MW. This will require 9.4788 MVar at Bus 26 and

147.2030 MVar at bus 18 to be installed in the system. The reduction of loss is very significant. Figure 5 and Figure 6 show the pattern and difference when D-STATCOM is installed. In general, as shown in Figure 5; with the implementation of EP as the optimization technique in minimizing the loss exhibits low profile as compared to the case before EP was implemented. It implies that after EP was implemented, D-STATCOM was also installed in the system.

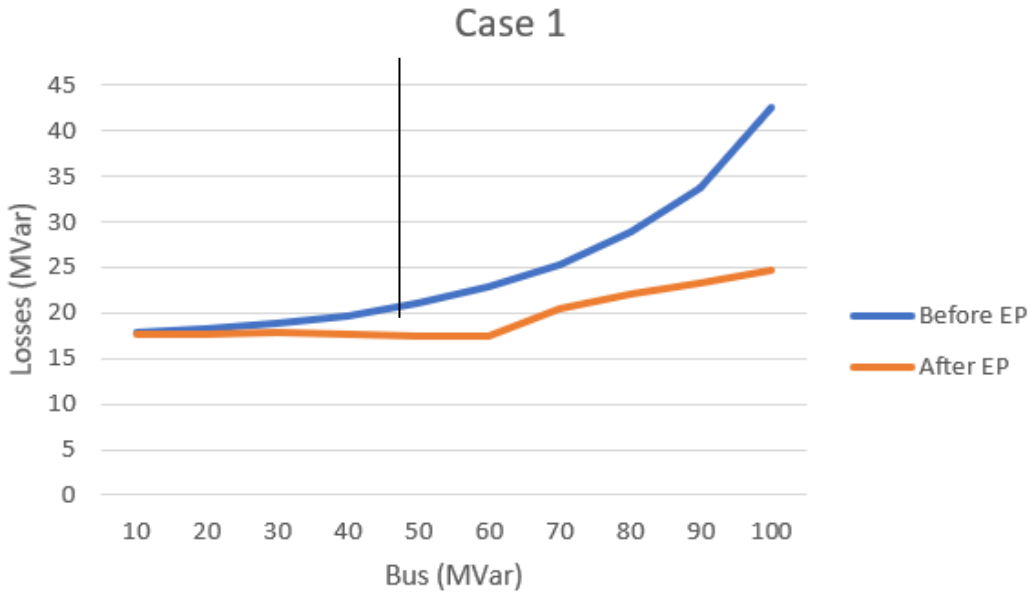

Figure 5: Profile of losses before and after EP implementation for Case 1 when the load bus is increased at Bus 20.

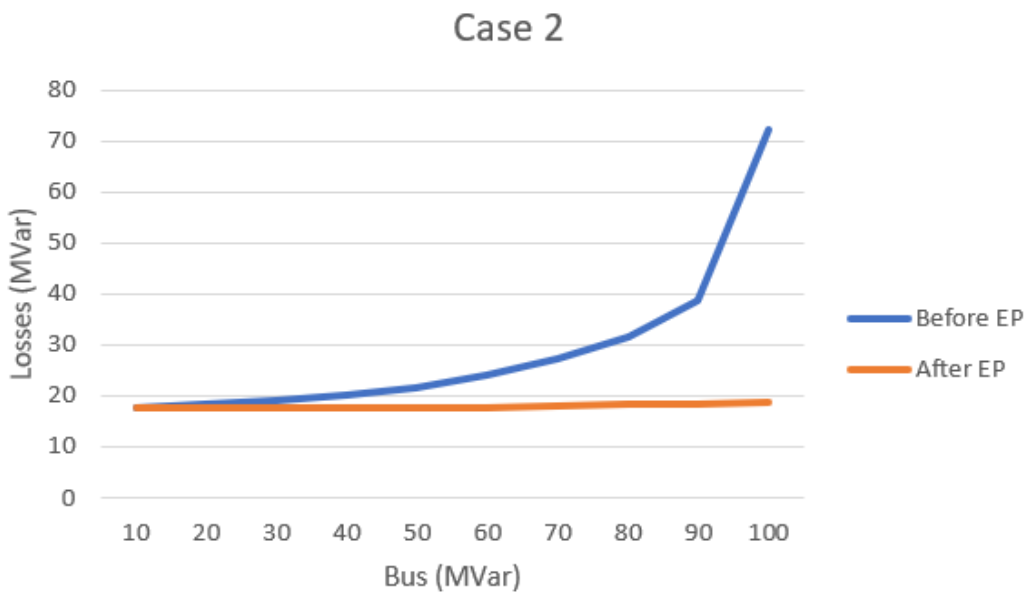

Figure 6: Profile of losses before and after EP implementation for Case 2 when the load bus is increased at Bus 18.

In Figure 6, similar phenomenon can be experienced as those observed in Figure 5. With the implementation of EP as the optimization technique in minimizing the loss exhibits low profile as compared to the case before EP was implemented. It implies that after EP was implemented, D-STATCOM was also installed in the system.

C. Integrated Multiverse Evolutionary Programming (IMVEP)

The initialization part of IMVEP is the same as Evolutionary Programming. In means that both EP and IMVEP may use the same random numbers during initialization. The 20 individuals generated during initialization process are the beginning of the whole optimization process. However, the placement of the D-STATCOM is fixed at buses 14 and 26 due to the complicated of the programming codes which determined the performance of the convergence. The optimization using IMVEP was conducted for the sizing of the D-STATCOM only, while the locations are fixed at both two buses. From Table 3, 20 individuals were randomly generated which managed to achieve all loss values lower than the loss-set of 18.2559 MW, i.e. the value before D-STATCOMs were not installed. χ_3 and χ_4 are the 2 variables for the sizing of the D-STATCOM. They are all very random in nature. Using IMVEP as the optimization technique, IMVEP managed to achieve the optimal solution indicated by the converged solution of χ_3 and χ_4. The first sizing of the D-STATCOM is 3.9267 MVar, while the second sizing is 8.5952 MVar to achieve minimal loss value of 18.1055 MW. This value is lower than the loss-set value of 18.2559 MW, before 2 units of D-STATCOM were installed in the system at buses 14 and 26.

Table 3: Results during initialization process and converged solution when Q_{d20}=20MVar, solved using IMVEP

Individual No	Initialization Process			Results for Converged Solution		
	χ_3 (MVar)	χ_4 (MVar)	Losses (MW)	χ_3 (MVar)	χ_4 (MVar)	Losses (MW)
1	0.2983	3.4345	18.2280	3.9267	8.5952	18.1055
2	4.2980	2.3514	18.1786	3.9267	8.5952	18.1055
3	6.8112	3.6931	18.2065	3.9267	8.5952	18.1055
4	7.3475	11.0275	18.1732	3.9267	8.5952	18.1055
5	7.0602	14.1920	18.2136	3.9267	8.5952	18.1055
6	4.4158	9.6631	18.1158	3.9267	8.5952	18.1055
7	3.8325	0.2506	18.1911	3.9267	8.5952	18.1055
8	1.1033	2.8428	18.2078	3.9267	8.5952	18.1055
9	2.4464	5.6681	18.1836	3.9267	8.5952	18.1055
10	8.8436	12.9068	18.2437	3.9267	8.5952	18.1055
11	0.0837	0.5855	18.2483	3.9267	8.5952	18.1055
12	6.7387	3.5887	18.2051	3.9267	8.5952	18.1055
13	4.2314	3.2845	18.1754	3.9267	8.5952	18.1055
14	10.4865	4.6381	18.2460	3.9267	8.5952	18.1055
15	9.5283	6.6407	18.2088	3.9267	8.5952	18.1055
16	2.7577	6.7232	18.1840	3.9267	8.5952	18.1055
17	0.1242	12.6096	18.2112	3.9267	8.5952	18.1055
18	7.0632	12.5148	18.1864	3.9267	8.5952	18.1055
19	7.6591	12.1277	18.1957	3.9267	8.5952	18.1055
20	8.0636	11.4128	18.1976	3.9267	8.5952	18.1055

Loss_set: 18.2559 MW

From Table 4, 20 individuals were randomly generated which managed to achieve all loss values lower than the loss-set, i.e. the value before D-STATCOMs were not installed. χ_3 and

χ_4 are the 2 variables for the sizing of the D-STATCOM. They are all very random in nature. Using IMVEP as the optimization technique, IMVEP managed to achieve the optimal solution

Table 4: Results during initialization process and converged solution when Q_{d20}=40MVar, solved using IMVEP

No	Initialization Process			Results for Converged Solution		
	χ_3 (MVar)	χ_4 (MVar)	Losses (MW)	χ_3 (MVar)	χ_4 (MVar)	Losses (MW)
1	2.9738	8.6600	19.6534	3.5994	5.8943	19.6418
2	3.5924	5.8833	19.6418	3.5994	5.8943	19.6418
3	5.5846	0.2609	19.7002	3.5994	5.8943	19.6418
4	5.4737	9.9399	19.6617	3.5994	5.8943	19.6418
5	4.9527	4.4546	19.6452	3.5994	5.8943	19.6418
6	6.2630	2.0352	19.6735	3.5994	5.8943	19.6418
7	4.8940	7.9559	19.6460	3.5994	5.8943	19.6418
8	4.6590	1.5128	19.6620	3.5994	5.8943	19.6418
9	1.3742	15.7979	19.7664	3.5994	5.8943	19.6418
10	2.4019	0.9761	19.6952	3.5994	5.8943	19.6418
11	3.2707	14.2040	19.7090	3.5994	5.8943	19.6418
12	1.3788	12.5867	19.7158	3.5994	5.8943	19.6418
13	5.0254	1.3649	19.6654	3.5994	5.8943	19.6418
14	9.2753	5.8654	19.7371	3.5994	5.8943	19.6418
15	0.6547	8.9720	19.7018	3.5994	5.8943	19.6418

indicated by the converged solution of χ_3 and χ_4. The first sizing of the D-STATCOM is 3.5994 MVar, while the second sizing is 5.8943 MVar to achieve minimal loss value of 19.6418 MW. This value is lower than the loss-set value of 19.7678 MW, before 2 units of D-STATCOM were installed in the system at buses 14 and 26. These 2 tables (Table 3 and Table 4) indicate the capability of the proposed IMVEP to minimize the total transmission loss in the system when 2 units of D-STATCOMs were installed in the system. Even the results of loss reduction was not high, but is it is duly acceptable and significant.

Conclusion

This paper has presented a computational intelligence-based technique for optimal placement of D-STATCOM in transmission loss control in power system using a new optimization technique. IMVEP has been proposed to solve the D-STATCOM installation schemes to minimize the loss in the system. Results obtained from the study revealed that the proposed technique is worth in performing the optimization process and comparable with EP.

Further exploration can be implemented using the proposed IMVEP technique with considerable alteration in the algorithm and the developed optimization engine. Some parameters adjustment or tuning can be done to achieve better results.

Acknowledgement

This study was supported by the Universiti Kebangsaan Malaysia with Project No. GUP-2020-018 and RHB-UKM-2021-002. It is a collaboration between the School of Electrical Engineering, College of Engineering, Universiti Teknologi MARA, Shah Alam, Selangor and Universiti Kebangsaan Malaysia, Bangi, Selangor.

References

[1] I. Musirin, "Novel Technique for Voltage Stability Assessment and Improvement in Power System," Ph.D. Thesis Universiti Teknologi MARA, Malaysia, 2004.

[2] A. A. Abdou, S. Kamel and M. Abdel-Akher, "Voltage Stability Assessment of Distribution Systems Including D-STATCOM using NEPLAN," 2016 Eighteenth International Middle East Power Systems Conference (MEPCON), Dec. 2016. doi:10.1109/MEPCON.2016.7836984.

[3] S. A. Taher and S. A. Afsari, “Optimal Location and Sizing of DSTATCOM in Distribution Systems by Immune Algorithm,” International Journal of Electrical Power & Energy Systems, vol. 60, Sept. 2014, pp. 34–44. doi: 10.1016/j.ijepes.2014.02.020

[4] Vanitha, D. D. . (2022). Comparative Analysis of Power switches MOFET and IGBT Used in Power Applications. International Journal on Recent Technologies in Mechanical and Electrical Engineering, 9(5), 01–09. https://doi.org/10.17762/ijrmee.v9i5.368

[5] S. Devi and M. Geethanjali, “Optimal Location and Sizing Determination of Distributed Generation and DSTATCOM using Particle Swarm Optimization Algorithm,” International Journal of Electrical Power & Energy Systems, vol. 62, Nov. 2014, pp. 562–70. doi: 10.1016/j.ijepes.2014.05.015.

[6] M. Hosseini, H. A. Shayanfar and M. Fotuhi-Firuzabad, “Modeling of Series and Shunt Distribution FACTS Devices in Distribution Systems Load Flow,” Journal of Electrical System, vol. 4, no. 4, Dec. 2008, pp. 1–22. https://journal.esrgroups.org/jes/papers/4_4_6.pdf

[7] Alaria, S. K., A. . Raj, V. Sharma, and V. Kumar. “Simulation and Analysis of Hand Gesture Recognition for Indian Sign Language Using CNN”. International Journal on Recent and Innovation Trends in Computing and Communication, vol. 10, no. 4, Apr. 2022, pp. 10-14, doi:10.17762/ijritcc.v10i4.5556.

[8] R. M. Abdalaal and C. Ngai Man Ho, “A Supervisory Remote Management System for Parallel Operation of Modularized D-STATCOM,” 2020 IEEE Applied Power Electronics Conference and Exposition (APEC), Mar 2020. doi:10.1109/APEC39645.2020.9124219.

[9] M. Abdel-Basset, D. El-Shahat, H. Faris and S. Mirjalili, “A Binary Multi-Verse Optimizer for 0-1 Multidimensional Knapsack Problems with Application in Interactive Multimedia Systems,” Computers & Industrial Engineering, vol. 132, June 2019, pp. 187–206. doi: 10.1016/j.cie.2019.04.025.

[10] K. Karthikeyan and P. K. Dhal, "Multiverse Optimization (MVO) Technique Based Voltage Stability Analysis Through Continuation Power Flow in IEEE 57 Bus," 1st International Conference on Power Engineering, Computing and CONtrol (PECCON-2017), March 2017. doi: 10.1016/j.egypro.2017.05.153.

[11] Chauhan, T., and S. Sonawane. "The Contemplation of Explainable Artificial Intelligence Techniques: Model Interpretation Using Explainable AI". International Journal on Recent and Innovation Trends in Computing and Communication, vol. 10, no. 4, Apr. 2022, pp. 65-71, doi:10.17762/ijritcc.v10i4.5538.

[12] H. A. Hassan and M. Zellagui, "MVO Algorithm for Optimal Simultaneous Integration of DG and DSTATCOM in Standard Radial Distribution Systems Based on Technical-Economic Indices," 21st International Middle East Power Systems Conference (MEPCON), Dec. 2019. doi: 10.1109/MEPCON47431.2019.9007995.

[13] J. Lin, L. Zhu, and Z. J. Wang, "A Hybrid Multi-Verse Optimization for The Fuzzy Flexible Job-Shop Scheduling Problem," Computers & Industrial Engineering, vol. 127, Jan. 2019, pp. 1089–1100. doi: 10.1016/j.cie.2018.11.046.

[14] G. I. Sayed, A. Darwish and A. E. Hassanien, "A New Chaotic Multi-Verse Optimization Algorithm for Solving Engineering Optimization Problems," Journal of Experimental & Theoretical Artificial Intelligence, vol. 30, no. 2, pp. 293–317, Jan 2018. doi: 10.1080/0952813X.2018.1430858.

[15] I. Benmessahel, K. Xie and M. Chellal, "A New Competitive Multiverse Optimization Technique for Solving Single-Objective and Multiobjective Problems," Engineering Reports, vol. 2, no. 3, March 2020, pp. 1–33. doi: 10.1002/eng2.12124.

[16] Pawan Kumar Tiwari, Mukesh Kumar Yadav, R. K. G. A. . (2022). Design Simulation and Review of Solar PV Power Forecasting Using Computing Techniques. International Journal on Recent Technologies in Mechanical and Electrical Engineering, 9(5), 18–27. https://doi.org/10.17762/ijrmee.v9i5.370

[17] M. Yaghoubi and A. Maroosi, "Simulation and Modeling of An Improved Multi-Verse Optimization Algorithm for QoS-Aware Web Service Composition With Service Level Agreements in The Cloud Environments," Simulation Modelling Practice and Theory, vol. 103, no. Sept. 2020, p. 102090. doi: 10.1016/j.simpat.2020.102090.

[18] B. Alireza, M. Sadegh and M. Farzad, "Self- Supplied Microgrid Economic Scheduling Based on Modified Multiverse Evolutionary Algorithm," Munich Personal RePEc Archive, Sept. 2019, no. 95892. https://mpra.ub.uni-muenchen.de/95892/1/MPRA_paper_95892.pdf.

[19] Garg, D. K. . (2022). Understanding the Purpose of Object Detection, Models to Detect Objects, Application Use and Benefits. International Journal on Future Revolution in Computer Science &Amp; Communication Engineering, 8(2), 01–04. https://doi.org/10.17762/ijfrcsce.v8i2.2066

[20] X. Wang, D. Luo, X. Zhao and Z. Sun, "Estimates of Energy Consumption in China Using A Self-Adaptive Multi-Verse Optimizer Based Support Vector Machine With Rolling Cross-Validation," Energy, vol. 152, June 2018, pp. 539–548. doi: 10.1016/j.energy.2018.03.120.

[21] Ghazaly, N. M. . (2022). Data Catalogue Approaches, Implementation and Adoption: A Study of Purpose of Data Catalogue. International Journal on Future Revolution in

Computer Science &Amp; Communication Engineering, 8(1), 01–04. https://doi.org/10.17762/ijfrcsce.v8i1.2063

[22] S. Rezaeian-Marjani, S. Galvani, V. Talavat and M. Farhadi-Kangarlu, “Optimal Allocation of D-STATCOM in Distribution Networks Including Correlated Renewable Energy Sources,” International Journal of Electrical Power & Energy Systems, vol. 122, Nov. 2020, pp. 106178. doi:10.1016/j.ijepes.2020.106178.

[23] S. Kamel, F. Jurado, and D. Vera, "A Simple Implementation of Power Mismatch DSTATCOM Model Into Current Injection Newton–Raphson Power-Flow Method," Electrical Engineering, vol. 96, no. 2, Nov. 2013, pp. 135-144. doi: 10.1007/s00202-013-0288-4.

[24] W. Rohouma, R. S. Balog, A. A. Peerzada and M. M. Begovic, “D-STATCOM For Harmonic Mitigation In Low Voltage Distribution Network With High Penetration of Nonlinear Loads,” Renewable Energy, vol. 145, Jan. 2020, pp. 1449-1464. doi:10.1016/j.renene.2019.05.134.

[25] B. Weqar, M. T. Khan and A. S. Siddiqui, “Optimal Placement of Distributed Generation and D-STATCOM in Radial Distribution Network”, Smart Science, vol. 6, no. 2, Dec. 2017, pp. 125-133. doi: 10.1080/23080477.2017.1405625.

[26] K. Ashwani and G. Atma Ram, “Optimal Placement of D-STATCOM Using Sensitivity Approaches in Mesh Distribution System With Time Variant Load Models Under Load Growth,” Ain Shams Engineering Journal, vol. 9, no. 4, Dec. 2018, pp. 783-799. doi: 10.1016/j.asej.2016.05.009.

[27] H. B. Tolabi, M. H. Ali and M. Rizwan, “Simultaneous Reconfiguration, Optimal Placement of DSTATCOM, and Photovoltaic Array in a Distribution System Based on Fuzzy-ACO Approach,” IEEE Transactions on Sustainable Energy, vol. 6, no. 1, Jan. 2015, pp. 210–218. doi: 10.1109/TSTE.2014.2364230.

[28] N. Kanwar, N. Gupta, K. R. Niazi and A. Swarnkar, Improved cat swarm optimization for simultaneous allocation of DSTATCOM and DGs in distribution systems. Journal of Renewable Energy, vol. 2015, Nov. 2015, pp. 189080. doi: 10.1155/2015/189080.

[29] Deepmala and A. Kumar, “Impact of Load Models on Distribution System Performance and Impact of D-STATCOM,” 2014 6th IEEE Power India International Conference (PIICON), June 2015, In: 6th IEEE power india international conference (PIICON). doi: 10.1109/POWERI.2014.7117777.

[30] A. Selim, S. Kamel and F. Jurado, “Optimal Allocation of Distribution Static Compensators Using A Developed Multi-Objective Sine Cosine Approach,” Computers & Electrical Engineering, vol. 85, July 2020, pp. 106671. doi: 10.1016/j.compeleceng.2020.106671.

[31] K. Singh and J. Kaur, “A CNN Approach to Identify COVID-19 Patients among Patients with Pneumonia”, Int J Intell Syst Appl Eng, vol. 10, no. 2, pp. 166–169, May 2022.

[32] Nakhaei A, Soltani F. “Modelling and Optimisation in the Design of Pipeline Network Systems Using Ant Colony Optimisation Algorithm (ACO)”. SRPH Journal of Interdisciplinary Studies, 2021; 3 (4) :1-17.